Precision 500 Hydrogen Generator
Site Preparation Guide

Contents

Customer Responsibilities

To ensure a successful and timely installation of your Peak generator, please refer to this set of requirements.

Correct site preparation is the first key step in ensuring that your generator and systems operate reliably over an extended lifetime.

This document is an information guide and checklist that outlines the requirements for your site.

It is essential your site meets the following specification prior to the installation date.

For details, see specific sections within this document

- ☐ The necessary spatial requirements are met.
- ☐ The correct environment is provided for the generator.
- ☐ Electrical outlet locations and quantities are planned.
- ☐ Adequate exhaust ventilation is provided.
- ☐ The correct tubing lengths and diameters are used in relation to the distance from the instrument.
- ☐ Maintenance requirements of the generator are adhered to.
- ☐ Units in storage must be run for a minimum of 1 hour each month.

Failure to meet the Site requirements of your Peak generator as stated above and detailed in this document could result in the unit underperforming and **possible loss of warranty.**

Please sign below to confirm your compliance with the aforementioned requirements.

Once complete please return to Peak Scientific, or whomever the unit was purchased from.

Return addresses can be found on the back page of this document.

Name:_____ Company: _____

Signed:_____ Date:_____

Model: _____ Cust. Sales Order No.:_____

Change History

Rev.	Comment	Name	Date
1			
2			
3			
4			

Related Manuals

Document number	Manual name	Description
UM-Precision500	Precision User Manual	Describes the operation of the generator and all service requirements. Supplied with the generator.
IG-Precision500	Precision Installation Guide	Details the installation process of the generator. Supplied with the generator.

Safety Notices

Symbols

This manual uses the following symbols to highlight specific areas important to the safe and proper use of the Generator:

WARNING	A **WARNING** notice denotes a hazard. It calls attention to an operating procedure, process or similar, which if not correctly performed or adhered to, could cause personal injury or in the worst case death. Do not proceed beyond a **WARNING** notice until the indicated conditions are fully understood or met.
CAUTION	A **CAUTION** notice denotes a hazard. It calls attention to an operating procedure, process or similar, which if not correctly performed or adhered to, could cause damage to the Generator or the application. Do not proceed beyond a **CAUTION** notice until the indicated conditions are fully understood or met.

Safety Notice to Users

WARNING

This site preparation guide must be read thoroughly and understood before installation and operation of your Peak Precision 500 Hydrogen Generator. Incorrect preparation or use of the Generator in a manner not specified by Peak Scientific MAY impair the SAFETY provided by the equipment.

WARNING

When handling, operating or preparing for installation, personnel must employ safe practices and observe all relevant local health and safety requirements and regulations. The attention of UK users is drawn to the Health and Safety at Work Act 1974, and the Institute of Electrical Engineers regulations.

Technical Specification

Environment

Minimum operating ambient temperature	10°C (50°F)
Maximum operating ambient temperature	25°C (77°F)
Maximum relative humidity	90% Non-Condensing
Minimum storage temperature*	10°C (50°F)
Maximum storage temperature*	25°C (77°F)

*NOTE – When taken out of storage the Generator should be allowed to acclimatize at room temperature for a minimum of 3 hours before operation.

Generator Outlets

Max Flow Rate	500 cc/min
Purity	99.9999%
Gas outlet	1 x 1/8" Swagelok compression fitting
Delivery pressure	0-100 psi (0-6.9 bar)

Electrical Requirements

Voltage	110v/230v
Frequency	50/60 Hz
Fuse	T10AH250V
Current	10 Amps
Input connection	C14 Connection
Power cord (Supplied)	C13 socket to local connection (10A minimum)
Pollution degree	2
Insulation category	II

General

Generator dimensions in cm W x D x H	38 x 55.3 x 48.4 (14.9" x 21.7" x 19.1")
Generator weight	55 kg (121 lb)
Shipping crate dimensions in cm W x D x H	55 x 80 x 68 (21.6" x 31.4" x 26.7")
Shipping weight	66 kg (145 lb)
Water purity requirement	<1.0µ Siemens/cm OR >1 Mohm-cm

Site preparation

Environmental control

If the generator is stored in an enclosed space the environment must be controlled via an air conditioner or extraction fan.

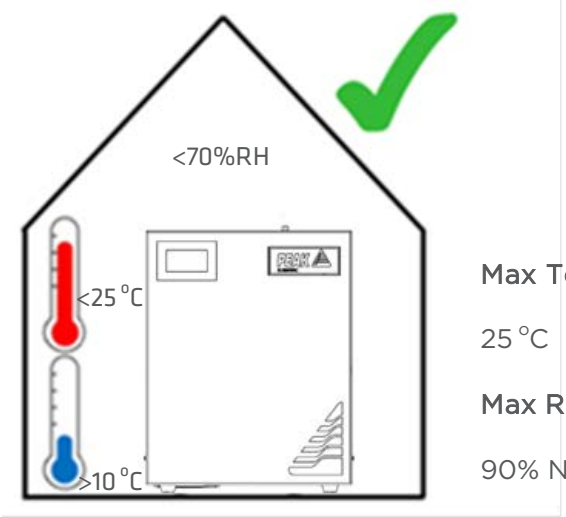

Max Temp;

25 °C

Max Relative Humidity;

90% Non-Condensing

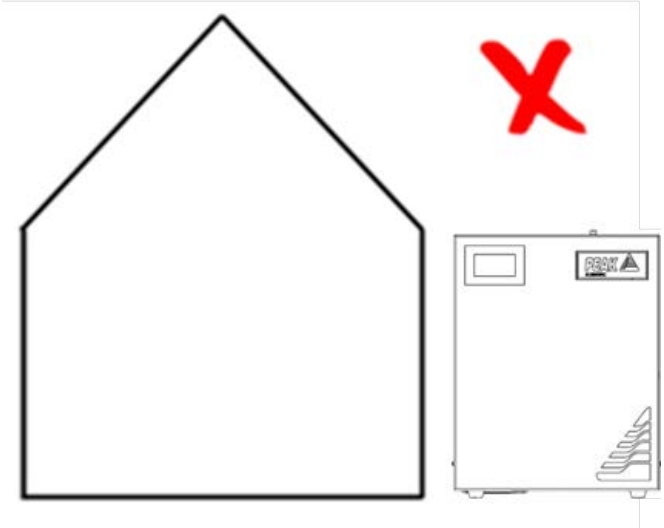

Generator MUST NOT be stored or installed outside.

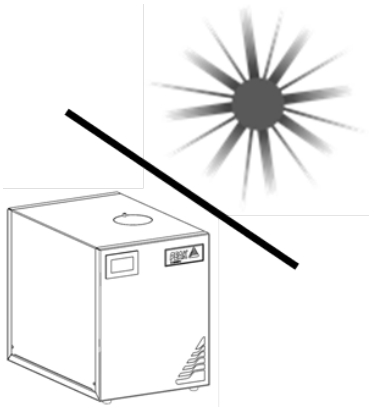

Keep generator out of direct sunlight.

Space provision

The minimum space should be provided as follows....

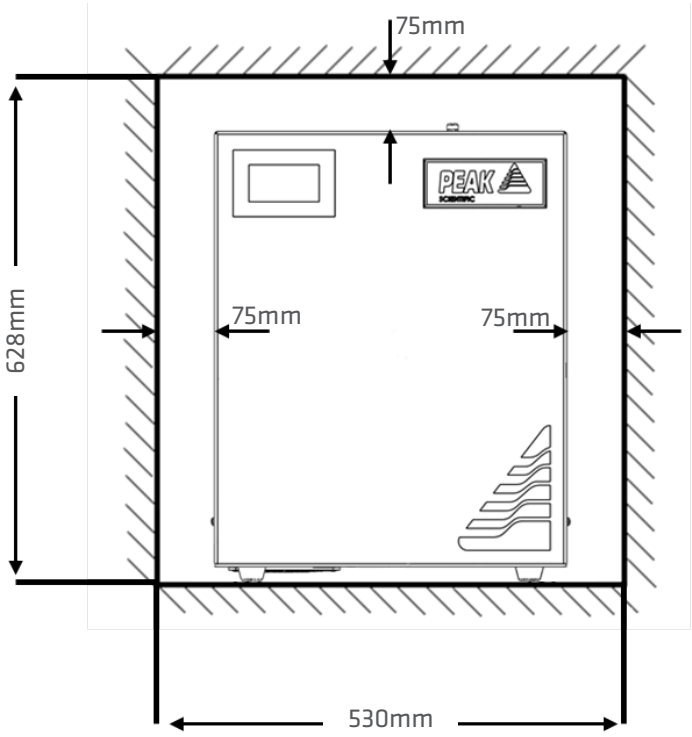

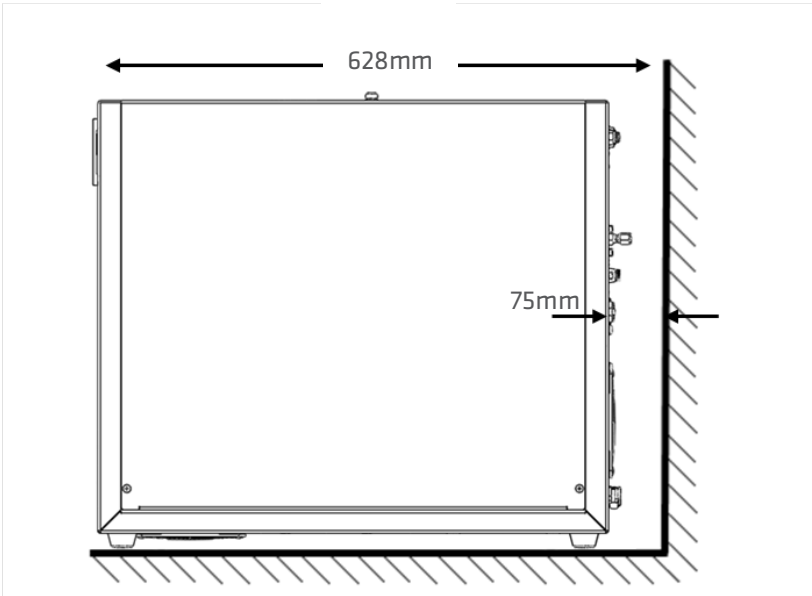

CAUTION

Failing to provide adequate cooling space around the generator may cause damage to the unit. This will reduce service life and invalidate warranty.

Electrical requirements

The below power cables are supplied with the generator.

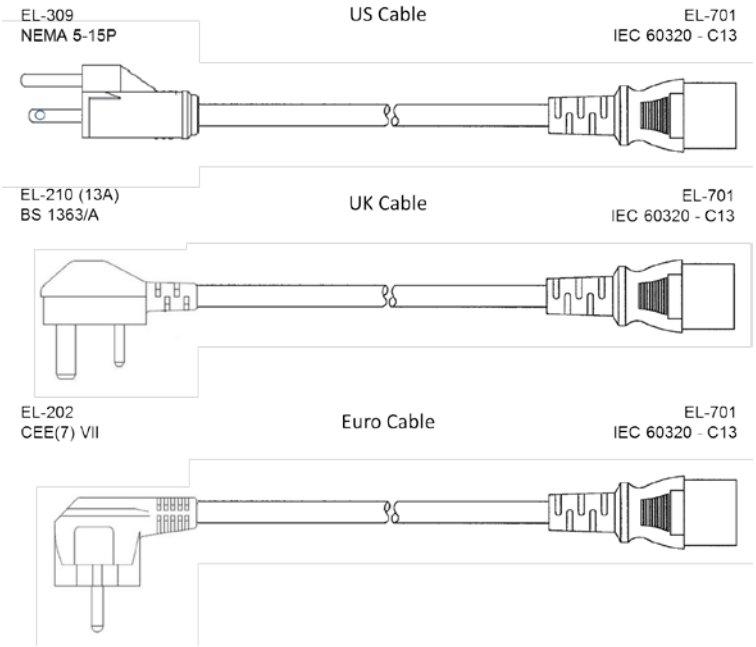

For cables pertaining to countries not displayed above, it is the responsibility of the end user to provide an appropriate power cable which meets the requirements defined in the Technical Specification section on page 6.

This unit is classified as SAFETY CLASS 1. THIS UNIT MUST BE EARTHED. Before connecting the unit to the mains supply, please check the information on the serial plate. The mains supply must be of the stated AC voltage and frequency.

The power cable supplied with the generator is 2m long.

A mains socket providing the power should be located adjacent to the generator and within a 1.5m radius to the generator.

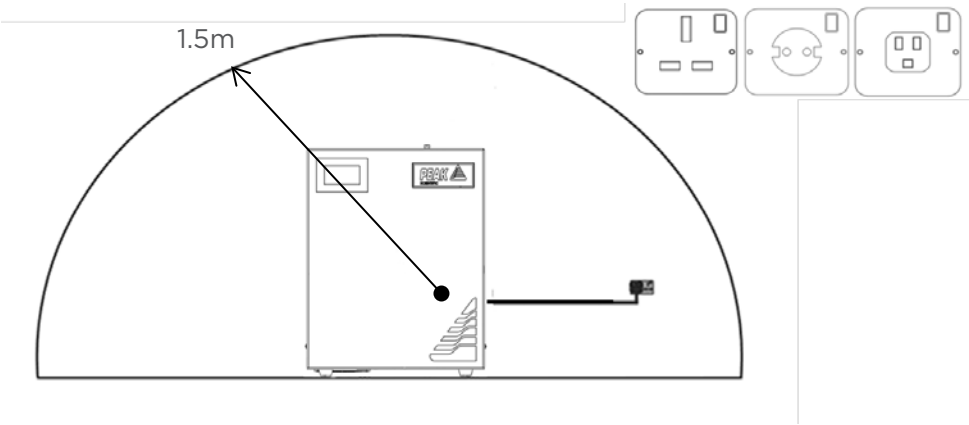

On-Site Transit

When moving the generator in its shipping crate, doorways and other openings such as elevators must fit with the sizes in the figure below.

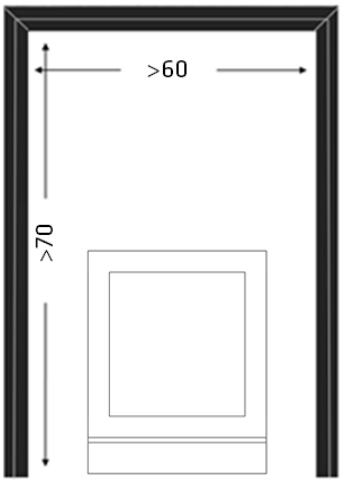

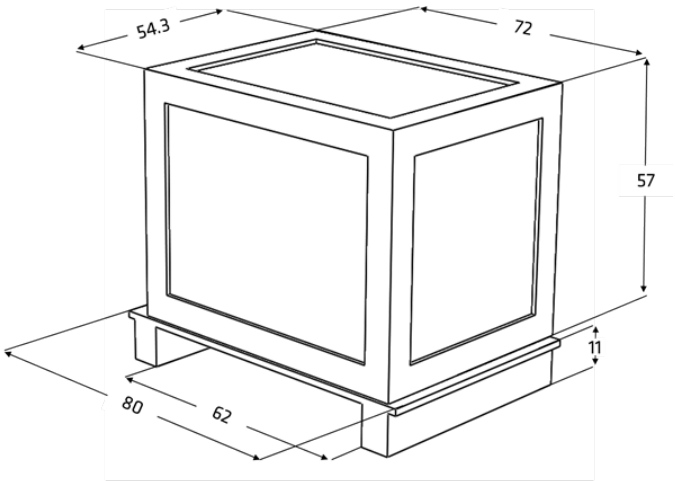

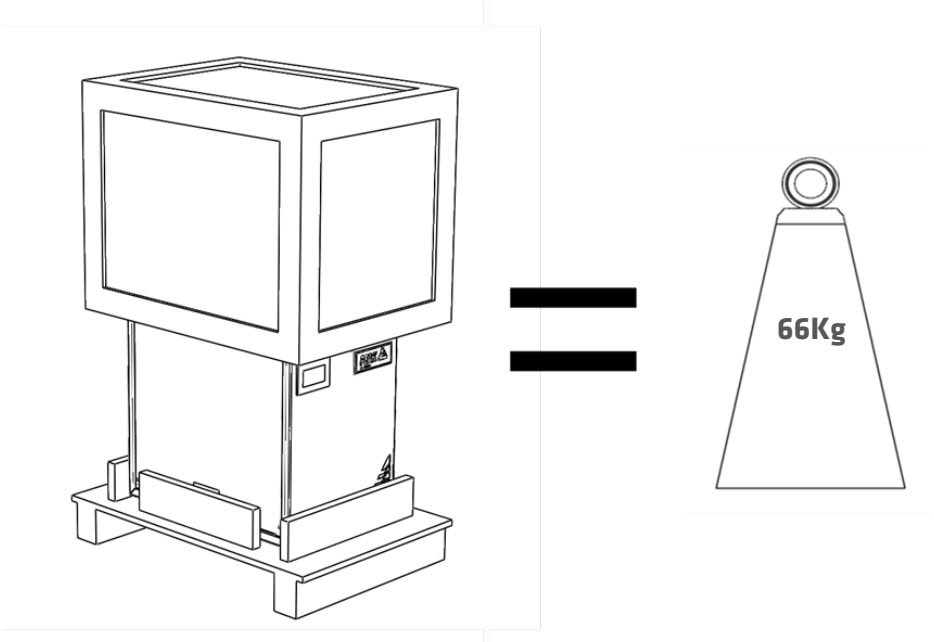

It is vital that the generator and crate remain upright during transit around the site.

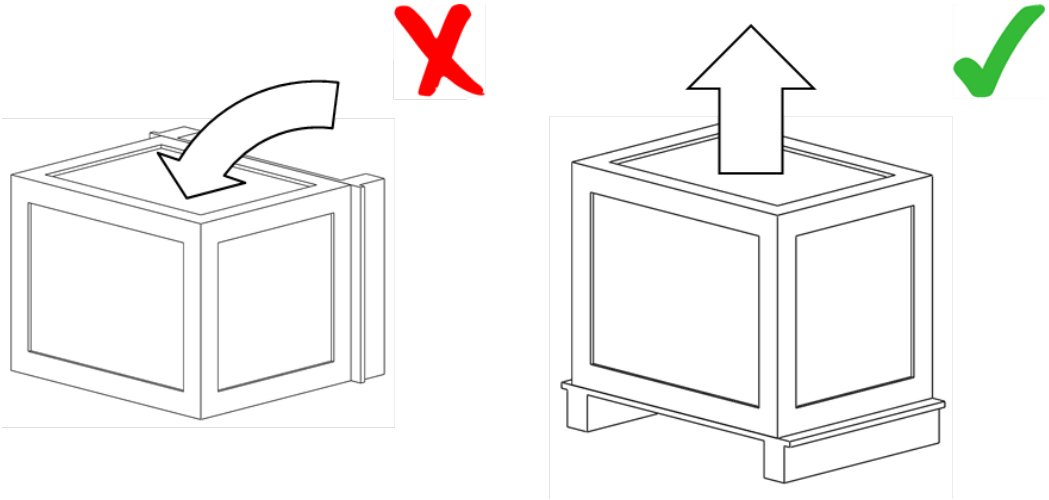

Failure to do so can cause flooding of components due to water stored in the machine, and result in possible loss of warranty.

Unpacking

Space Required

The image below shows the minimum space required to unpack the generator from its shipping crate.

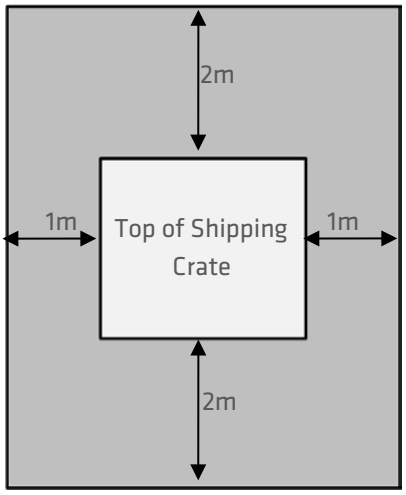

Tools

Required

Pozidrive #2 Screwdriver

Recommended

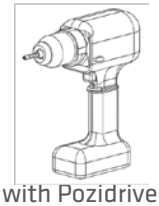

Drill with Pozidrive #2 Bit

Unpacking

Remove all screws encircled in red, there are two on each side, use a Drill or Pozidrive #2 screwdriver. Once all screws have been removed, the upper section of the crate can be lifted upwards and removed.

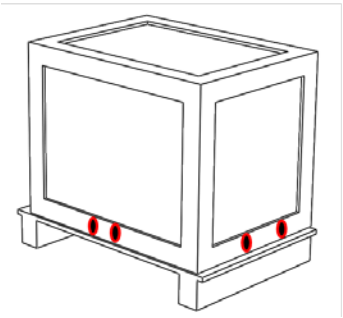

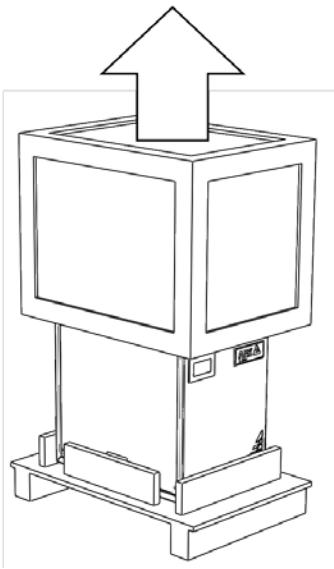

Tubing lengths

Tubing sizes should be chosen with accordance to the diagram below.

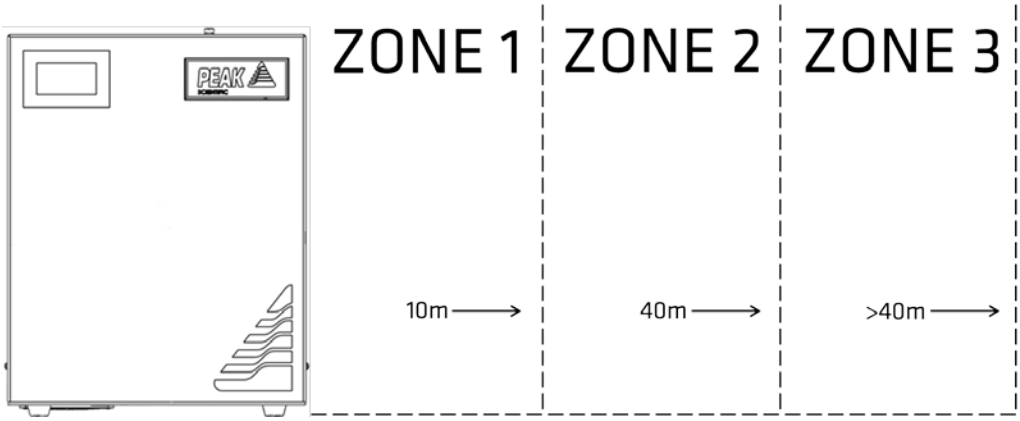

Zone	Distance from Instrument	Tubing OD mm (Inches)
1	Up to 10m	3.125mm (1/8")
2	Up to 40m	3.125mm (1/8")
3	Over 40m	3.125mm (1/8")

Copper Tubing

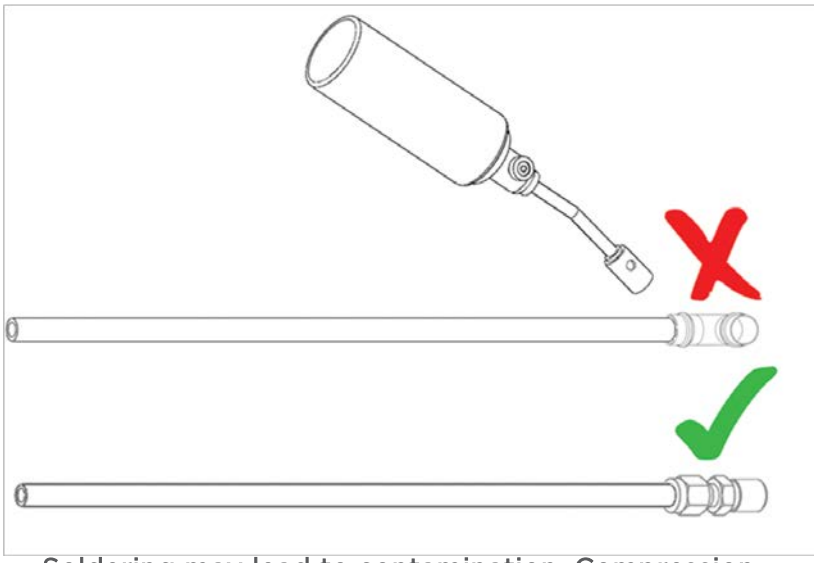

Soldering may lead to contamination. Compression fittings recommended.

Transport Pipe

Before installation, remove the red transit plug fitted to the vent port at the rear of the generator. Do not obstruct or connect the vent ports to any application.

Failing to observe this could lead to permanent damage to the generator.

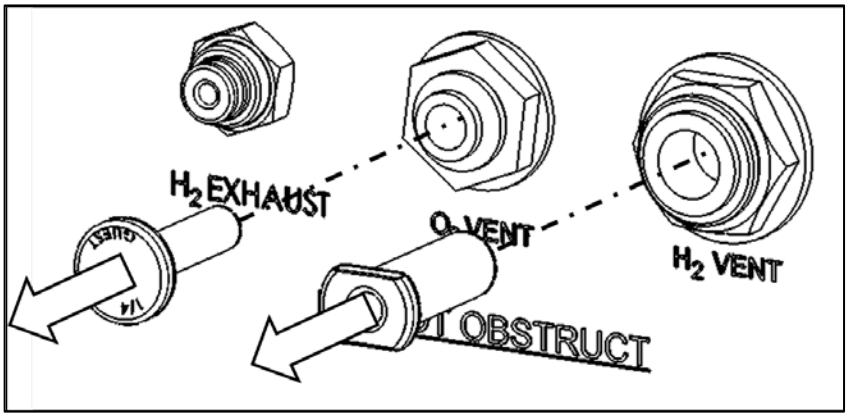

Prolonged Storage

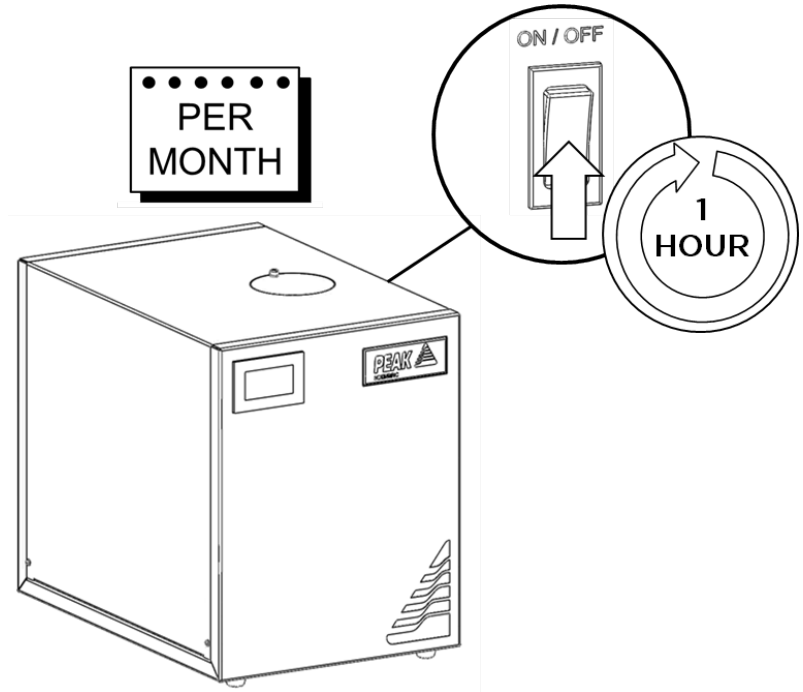

The generator must not be left in prolonged storage. If the unit is intended to be left unused for a period of time, then it must be switched on for 1 hour each month, to allow the water to be filtered through the system.

Water Quality and Storage

Use only High Grade Deionised water, which must have a conductivity of less than or equal to 1µS/cm at 20°C and should be replaced monthly.

Use of water in the unit with a purity of less than specified will result in a lower efficiency of hydrogen production, failure of the generator and loss of warranty.

Store water in a dark container away from direct sunlight.

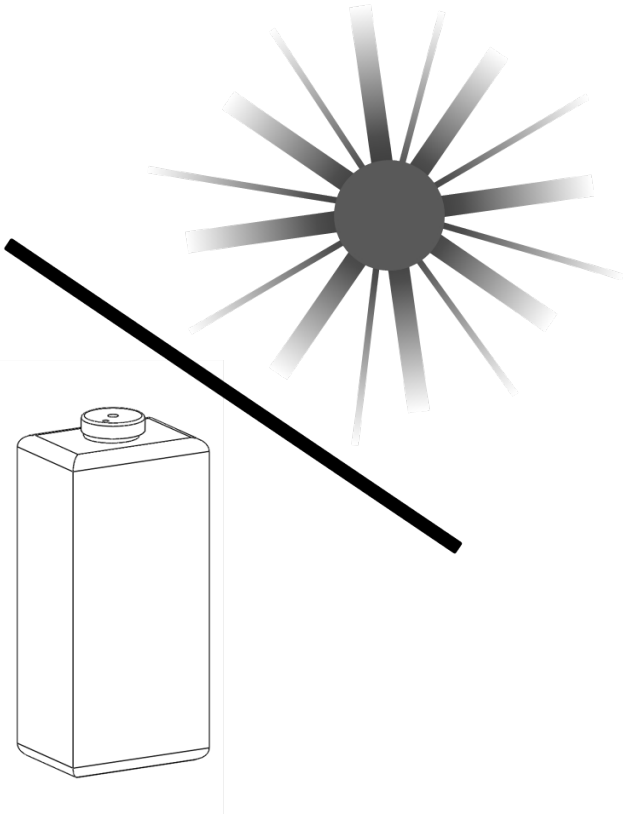

Automatic Filling

The Precision Hydrogen generator uses an automatic water filling system, whereby sensors in the unit's internal water tanks detect when the water level reaches a minimum.

This then refills the tank using a rear connection to an external DI water supply.

The unit should be connected to the Water supply as shown below.

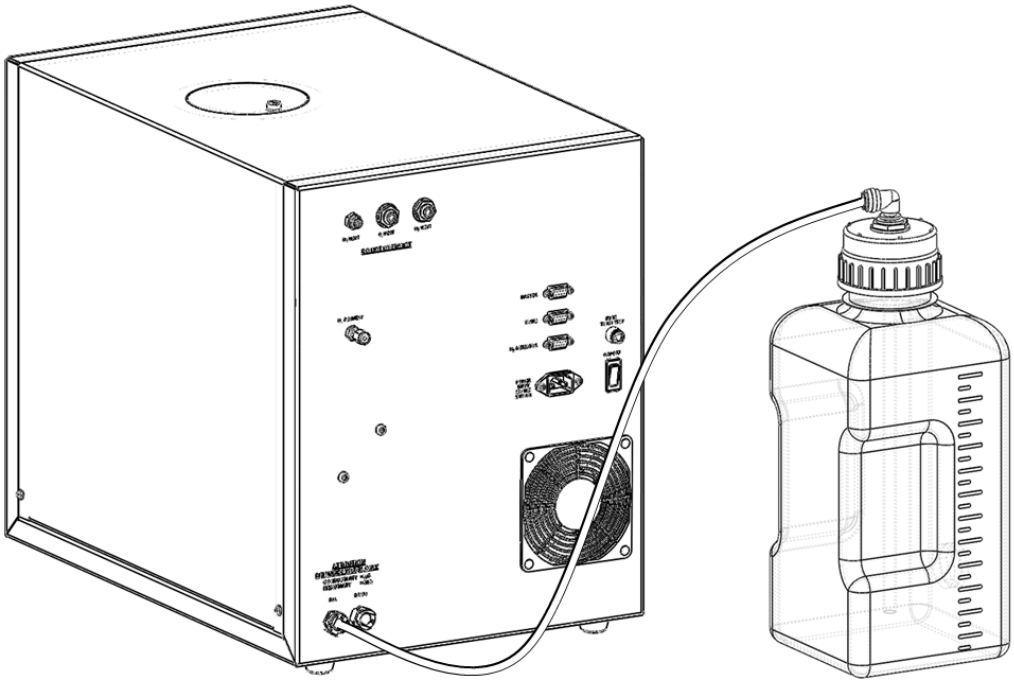

Peak Scientific UK
Fountain Crescent
Inchinnan Business Park
Inchinnan
PA4 9E
Scotland, UK
Tel: +44 (0)141 812 8100
Fax: +44 (0)141 812 8200

Peak Scientific North America
19 Sterling Road
Suite #8
Billerica, MA 01862

USA
Tel: +1 866 647 1649
Fax: +1 978 608 9503

Peak Scientific India
202, Amsri Shamira
Old Lancer Line
Opp. St. Mary's Degree College
S.D. Road Secunderabad
500 025, India
Tel: +91 (0)40 2780 0663
Fax: +91 (0)40 2780 0663

Peak Scientific Africa
Block D, Unit D40
The Grove Business Estate
Old Paardevlei Road
Somerset West
7130, South Africa
Tel: +27 (0)2185 1 6542
Fax: +27 (0)8654 64473

Peak Scientific Germany
Herriotstrasse 1
60528 Frankfurt

Germany
Tel: +49 (0)69 677 33 490
Fax: +49 (0)69 677 33 200

Peak Scientific China
68A, 31/F Jin Mao Tower
88 Shi Ji Avenue
Pudong, Shanghai
200 120
China
Tel: +86 21 2890 9652
Fax: +86 21 2890 9999

Peak Scientific Mexico
Solon 352
Col. Los Morales Polanco
11530 Mexico, D.F.

Mexico
Tel: +52 1 771 772 5757
Fax: +44 (0)141 812 8200

Peak Scientific Taiwan
4F. 6 No. 736
Zhongzheng Rd.
Zhong Dist
New Taipei City 23511
Taiwan (R.O.C.)
Tel: +886 2 8226 2383
Fax: +886 8 8226 9499