NM420L NITROGEN GAS GENERATOR

PEAK

USER MANUAL
UM-NM420L -19”Rack

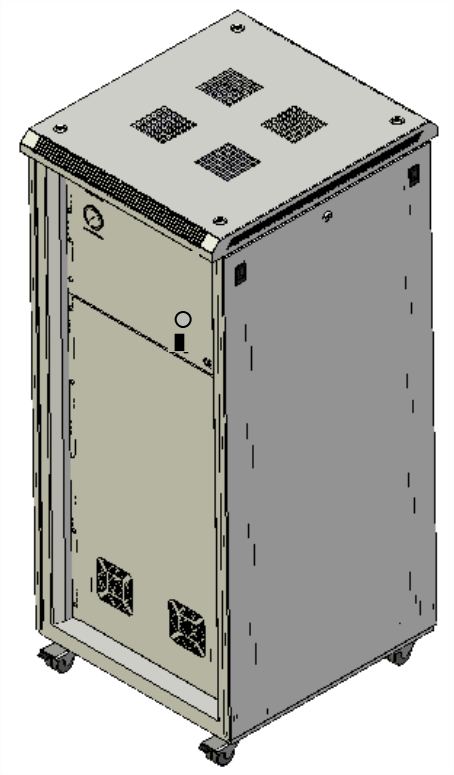

Peak Scientific Instruments Ltd.

www.peakscientific.com

UK

Fountain Crescent
Inchinnan Business Park
Inchinnan
Renfrew PA4 9RE
Scotland
UK

Tel. +44 (0) 141 812 8100
Fax. +44 (0) 141 812 8200
info@peakscientific.com

USA

19 Sterling Road, Suite #5
P.O. Box 379
Billerica
MA 01862
USA

Tel. +1 866 647 1649
Fax. +1 866 647 1649
usasupport@peakscientific.com

INDIA

Peak Scientific India
4A, Shantinivas Apts
12-7-295, Mettuguda
Hyderabad, 500 017
Andhrapradesh
India

Tel. +91 40 2782 0047
Fax. +91 40 2783 2441
indiasupport@peakscientific.com

Contents

	Page No
Document History	3
Warranty Statement	4
Safety Notice to Users	4
Declaration of Conformity	5
Air Connection	6
Electrical Connection	6
Principle of Operation	7
Commissioning	8
Maintenance Schedule	9
Technical Specifications	12
Pneumatic Diagram	13
Electrical Diagram	14
Over Dimension	15
Maintenance Log	16
Notes	17

History

Rev. No.	Changed	Initials	Date
1	Document Created	S. Khan	19/05/10

Warranties & Liabilities

Warranties and Liabilities

1. The Company warrants that it has title to the Goods.

2. Subject to the provisions of this clause the Company warrants that the Goods shall comply in all material respects with any specification referred to in the Order Confirmation (as the same may be amended) and shall, subject thereto, be free from defects in material and workmanship for the lesser of a period of twelve months from the date of delivery or thirteen months from the date of dispatch from the factory.

3. Save as provided in this clause and except where the Goods are sold to a person dealing as a consumer (within the meaning of the Unfair Contract Terms Act 1977) all warranties, conditions or other terms implied by statute or common law are hereby expressly excluded save to the extent they may not be lawfully excluded. When the Goods are sold to a consumer within the meaning of the Unfair Contract Terms Act 1977 their statutory rights are not affected by the provisions of this clause.

4. In the event of the Customer making a claim in respect of any defect in terms of clause 2 hereof the Customer must:-
   4.1. reasonably satisfy the Company that the Goods have been properly installed, commissioned, stored, serviced and used and without prejudice to the generality of the foregoing that any defect is not the direct or indirect result of lack of repair and/or servicing, incorrect repair and/or servicing, use of wrong materials and/or incorrect spare parts; and
   4.2. allow the company to inspect the Goods and/or any installation and any relevant packaging as and when reasonably required by the Company.

5. Subject to the Company being notified of any defect as is referred to in sub-clause 2 hereof within a reasonable time of it becoming apparent and subject always to the terms of sub-clause 4 hereof, the Company shall, in its option, replace or repair the defective Goods or refund a proportionate part of the Price. The Company shall have no further liability to the Customer (save as mentioned in sub-clause 6 hereof).

6. The Company shall be liable to indemnify the Customer in respect of any claim for death or personal injury to any person in so far as such is attributable to the negligence or breach of duty of the Company or any failure by the Company to comply with the provisions of sub-clause 2 hereof.

7. Save as provided in sub-clause 2 hereof the Company shall not be liable in respect of any claim by the Customer for costs, damages, loss or expenses (whether direct, indirect, consequential or otherwise) or indemnity in any respect howsoever arising including, but not by way of limitation, liability arising in negligence (other than pursuant to clause 6 above) that may be suffered by the Customer or any third party.

⚠ Caution

SAFETY NOTICE TO USERS

These instructions must be read thoroughly and understood before installation and operation of your Peak Scientific NM420L. Use of the Generator in a manner not specified by Peak Scientific MAY impair the SAFETY provided by the equipment.
When handling, operating or carrying out any maintenance, personnel must employ safe engineering practices and observe all relevant local health and safety requirements and regulations. The attention of UK users is drawn to the Health and Safety at Work Act 1974, and the Institute of Electrical Engineers regulations.

WARNING: Nitrogen is not a poisonous gas, but if the concentration in the inhaled air becomes too high there will be a risk of asphyxiation.

Declaration of Conformity

Declaration of Conformity

RoHS Statement of Compliance

The European RoHS (Restriction of Hazardous Substances) Directive 2002/95/EC aims to reduce the use of hazardous materials within a certain scope of products – mostly electrical and electronic.

Peak Scientific Instruments Ltd has developed all reasonable 'due diligence' controls, to ensure that our products comply with the principles, and requirements, of this directive. Similar directives in the United States and China, for example, have also been captured within this programme.

Where a specific certificate of compliance is required, this can be requested, on a product serial number basis, from Peak Scientific Instruments Ltd, by contacting us though info@peakscientific.com.

WEEE Statement of Compliance (WEE/FJ0116XU)

The WEEE (Waste of Electrical & Electronic Equipment) Directive 2002/96/EC, issued by the European Union, aims to reduce the impact, upon the environment, from disposal of certain types of equipment. It requires producers to implement controls, to ensure that equipment that they produce, is correctly disposed of, following the end of its useful life.

Peak Scientific Instruments Ltd fully complies with it's obligations towards this important legislation. These obligations refer to all electrical equipment that has been dispatched by us from 1st July, 2007, within the United Kingdom. As part of our compliance towards this, we have placed the management of this disposal with the B2B Compliance scheme. They can be contacted directly on 01691-676124, or by visiting their website on www.b2bcompliance.org.uk.

Ken Brown
Quality Assurance Manager

AIR CONNECTION

The Nitrogen Generator should be connected to a **clean, dry, OIL - FREE** source of compressed air. A minimum pressure of 125 psig is required for efficient operation of the Generator. Any doubts as to the suitability of your compressed air supply should be referred to the factory for advice.

A MAXIMUM OIL VAPOUR CONTENT OF 5 mg per m^3 is PERMISSIBLE
Air Inlet and Nitrogen Outlet connections are at the rear of the generator in the middle right side of the panel. The Air inlet connection is the left port. 1/2" BSP female, outlet port is 3/8" BSP female. The generator is supplied with two *Breathing Air* pre-filters and an *Activated Carbon* post filter, which are fitted internally. The *Breathing Air* filters will drain moisture and are equipped with automatic drains. This is connected to the 1/8" BSP Female port at the bottom of the rear panel. Any bulk moisture in the inlet air will be trapped by these filters and released through this drain port, which should be led to a convenient place.

ELECTRICAL REQUIRMENT

Important Electrical Notice

This unit is classified as SAFETY CLASS 1 equipment. THIS UNIT MUST BE EARTHED. Before connecting the unit to the mains supply, please check the information on the serial plate. The mains supply must be of the stated AC voltage and frequency.

EARTH/GROUND (E):	**Green & Yellow**	**or**	**Green**
LIVE (L): -	**Brown**		**Black**
Neutral (N): -	**Blue**		**White**
Fuse			**1.6Amp**

The generator protection fuse is located on the front panel left hand side next to on/off switch of the Generator.

Connect the generator to a single-phase supply using the power cord provided.

Principle of Operation

Principle of Operation

Peak Scientific Instruments Membrane Generators utilise *Hollow Fibre Membrane* Technology to efficiently separate Nitrogen from other gases present in ambient air. The membrane operates on the principle of *selective permeation* in that so-called *"Fast"* gases such as H_2O, CO_2 & Oxygen will permeate through the membrane wall whilst so-called *"Slow"* gases will not and continue along the membrane tube and are thus available for collection and use.

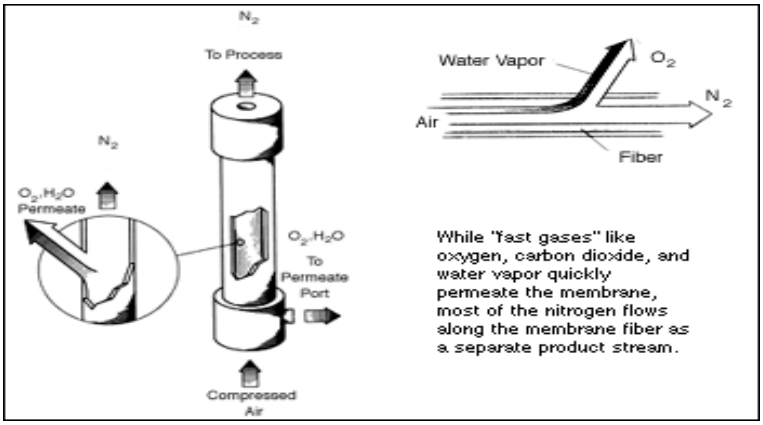

Air passes into the system via the *Breathing Air Filter.* This will prevent bulk moisture and harmful contaminants from reaching the Membrane. The clean air then passes into the Membranes where Oxygen, CO_2 and Moisture are removed allowing High Purity Nitrogen to pass through. The Output Flow is regulated for pressure and then passed through an *Activated Carbon* Filter to ensure no carry-over of harmful contaminants

Commissioning

Commissioning

With the Generator installed as described earlier. Disconnect the Nitrogen Outlet connection to allow the generator to vent to atmosphere until the unit is stabilized then open the air supply. The Generator has been pre-set in the factory to give the specified output flow-rate and pressure. Once the Membrane reaches the design pressure the Generator will stabilise and produce pure Nitrogen. Maximum purity will be achieved after around 1 hour. After this time the generator can be re-connected to the application.

The design of the generator is that it will deliver up to rated output flow of Nitrogen at 100 psig. Should the demand for Nitrogen be less than the rated output flow, or indeed should the demand stop the generator will Automatically go into stand by mode this will switch off inlet Air supply, and on demand of Nitrogen the pressure switch will detect and energize solenoid valve and generator will start to produce Nitrogen. The generator is protected from over pressurising.

Maintenance Schedule

WARNING: Servicing and/or repair of the Generator should only be undertaken by a TECHNICALLY COMPETENT PERSON with the Generator in a safely isolated condition.

Due to the simplicity of the design and the small number of moving parts the NM Series Nitrogen Generator will have a long and trouble free life. However as with all scientific and technical equipment it should be regularly inspected and serviced as below

BA Inlet Filters	**Every 12 – months**
RAC Filter Elements	**Every 12 - months**

BA Inlet Filter Elements

These should be changed at 12 months intervals. In addition filter bowls should be cleaned and, the operation of the auto-drains should be checked. if auto-drain requires replacing. Part # is (02-4485).

FAILURE TO FOLLOW THE PRESCRIBED MAINTENANCE PLAN WILL INVALIDATE THE PRODUCT WARRANTY

The Air supply to the Generator MUST be turned OFF and the Generator MUST be de-pressurised prior to attempting to remove ANY filter bowl. Failure to do this may cause injury.

Maintenance

Inlet Filter / Separator Elements

These should be changed at intervals as indicated below. In addition filter bowls should be cleaned and, the operation of the auto-drains should be checked.

The Air supply to Generator MUST be turned OFF and the Generator MUST be de-pressurised prior to attempting to remove ANY filter bowl. Failure to do this may cause injury.

Inlet *Breathing Air Filter* / Separator Elements

The top Filter Element (00-4424) should be changed at 12-month intervals. The bottom element should be changed at 12-month intervals. The Part Numbers are as shown in the drawings below.

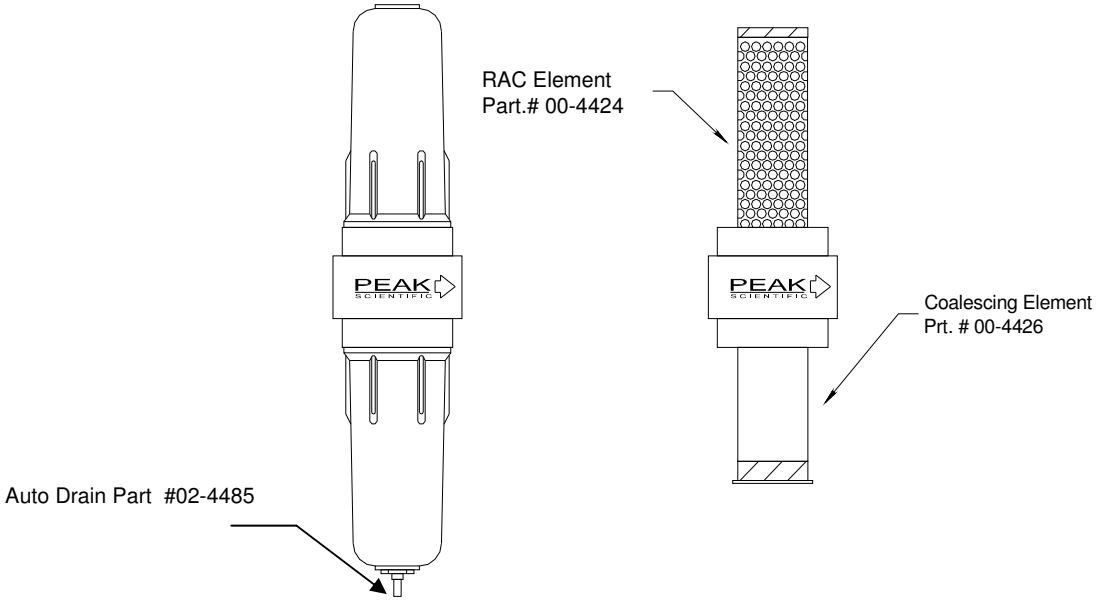

Maintenance

RAC Filter

The Element is as shown, and should be changed at 12-month intervals.

The Air supply to the Generator MUST be turned OFF and the Generator MUST be de-pressurised prior to attempting to remove ANY filter bowl. Failure to do this may cause injury.

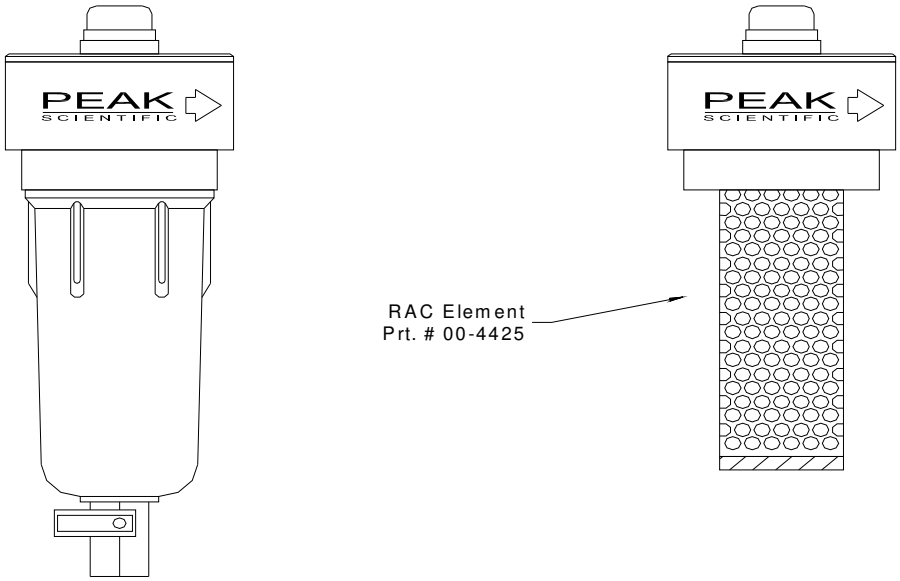

The filter housing is removed by un-screwing in a counter clockwise direction

IMPORTANT!!! Ensure that the system is NOT under pressure before attempting to remove the bowl and that the air supply is shut-off.

General Details

Technical Data

Minimum Operating Ambient Temperature	5 ºC (41 ºF)
Maximum Operating Ambient Conditions	30 ºC (86 ºF) 70% RH(max)
Inlet Conditions (Free of oil and bulk moisture)	
Minimum Air Inlet Pressure	125 psig (8.61 Barg)
Maximum Air Inlet Pressure	145 psig (10.0 Barg)
Minimum Air Inlet Flow Rate	1260 l/min (ATP)
Electrical Connection	
100Vac – 240Vac	Fuse 1.6Amps
Outlet Gas	
Maximum Pressure Drop (Outlet-Inlet) δP	8 psig
Maximum Gas Outlet Pressure	100 psig
Maximum Outlet Flow (High Purity Nitrogen)	420 Litres/min (ATP)
Start up time for Purity	60 minutes
Particles	0.01um
Serviceable Parts List	**(Service Kit Part # 08-4712)**
Breathing Air Inlet Filter Elements	00-4424(x2) 00-4427(x2)
Active Carbon Filter Element	00-4425
General	
Dimensions W x D x H cm (inches)	61 x 66 x 140 (24 x 26 x 55)
Shipping Weight Kg (lbs)	190 (418)
Shipping Weight Dims Kg (lbs)	78x80x160 31x32x63

Pneumatic

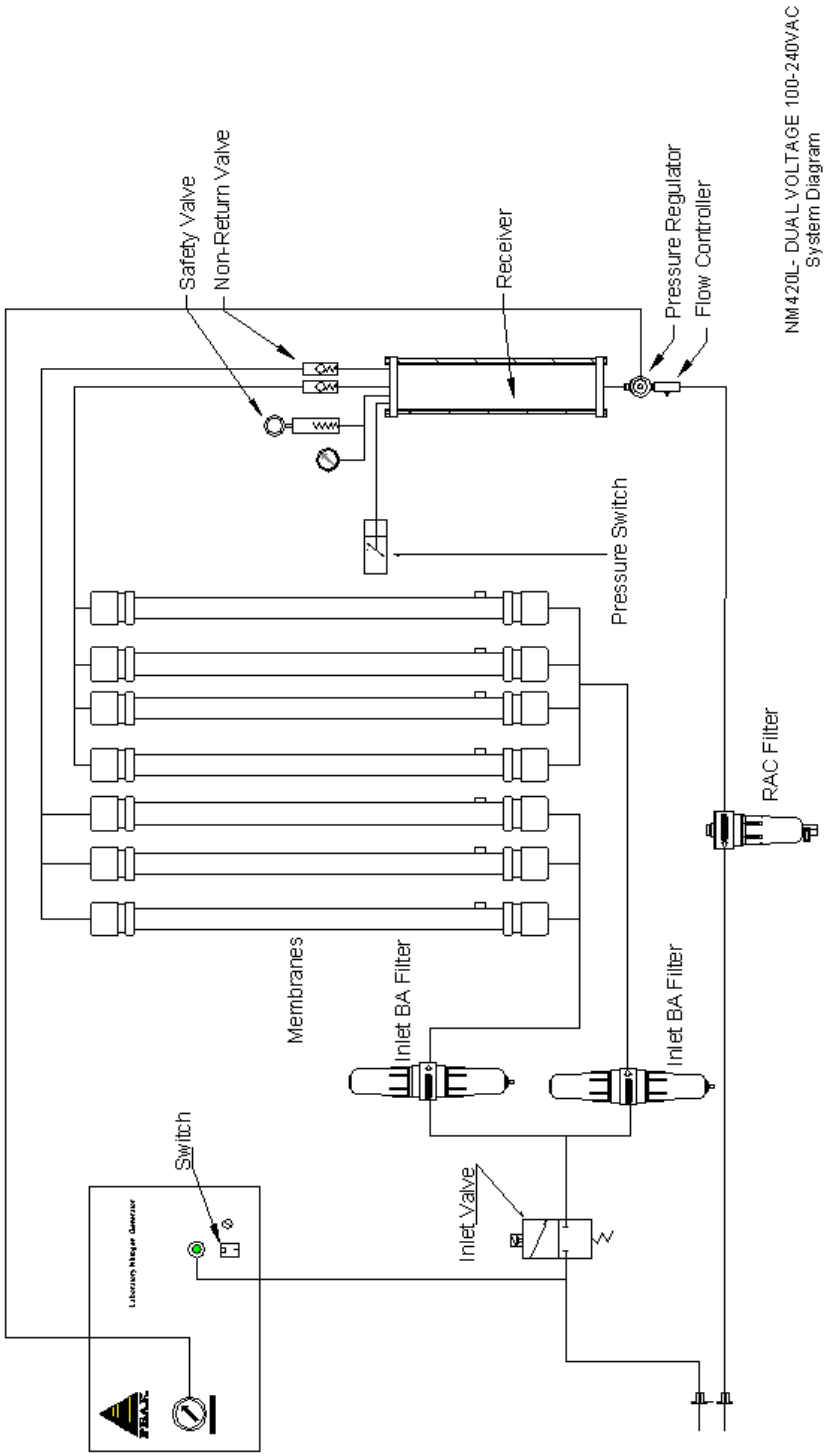
Safety Valve
Non-Return Valve
Receiver
Pressure Regulator
Flow Controller
NM420L- DUAL VOLTAGE 100-240VAC
System Diagram
Pressure Switch
RAC Filter
Membranes
Inlet BA Filter
Inlet BA Filter
Switch
Inlet Valve

Electrical

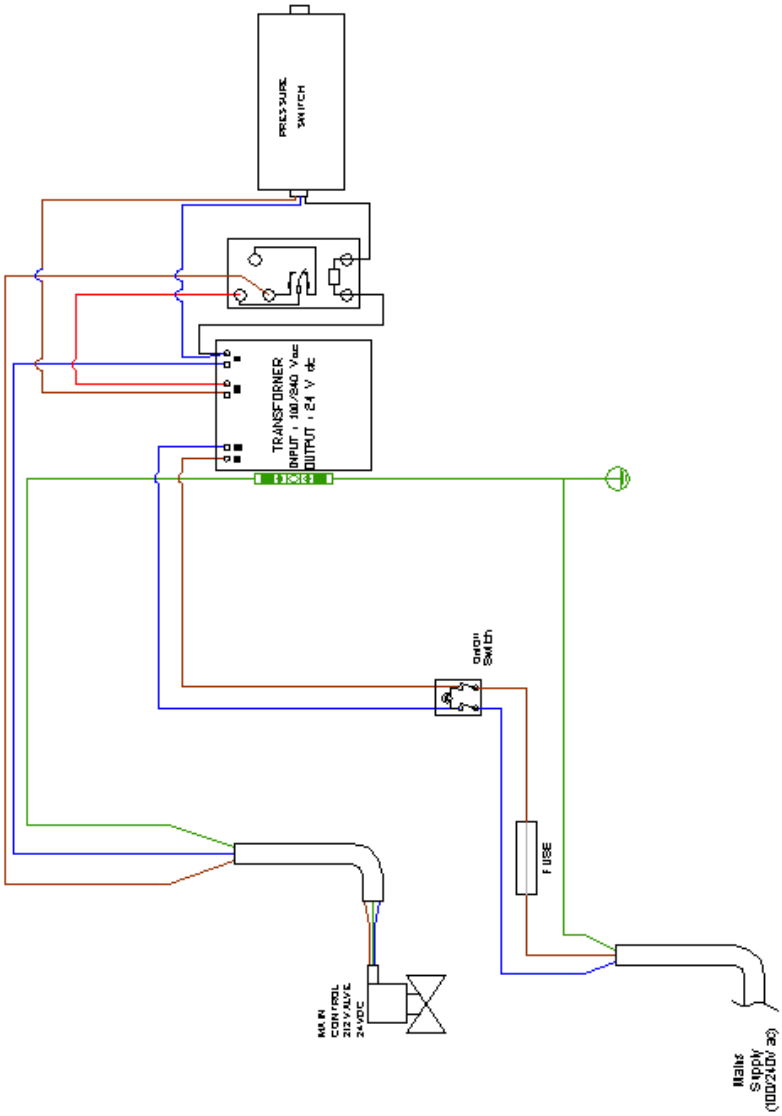
PRESSURE SWITCH
TRANSFORMER
INPUT : 100/240 Vac
OUTPUT : 24 V dc
On/Off Switch
FUSE
MAIN CONTROL 212 V VALVE 24VDC
Mains Supply (100/240V ac)

Overall Dimensions

Overall Dimensions

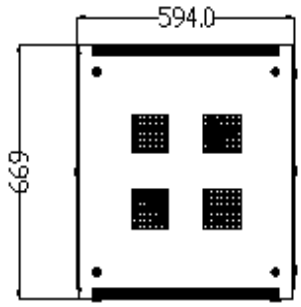

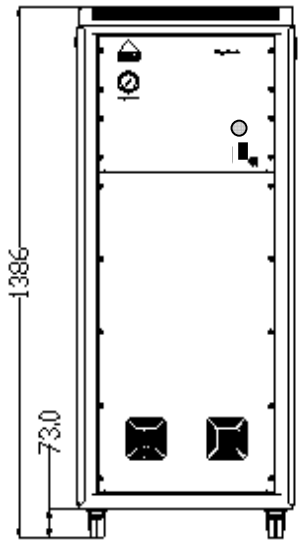

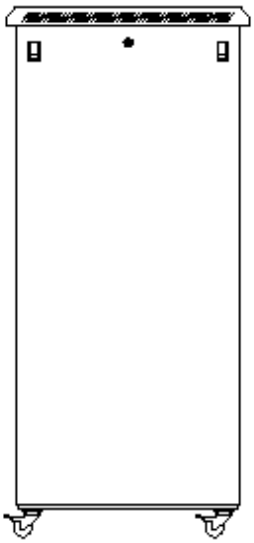

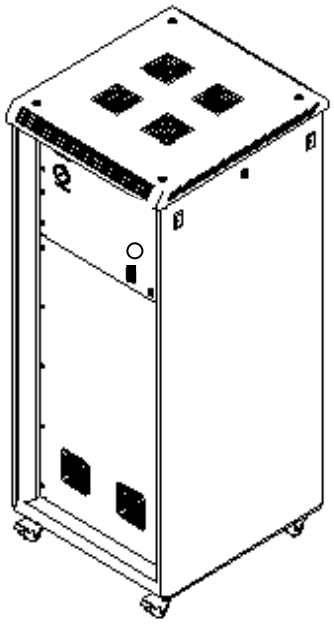

Maintenance log

Maintenance Log

Model- NM420L

Serial number

Work Done	Remarks	Date	Name

Notes